LightWave's Plug In Assembly module is an effective solution for connecting multi-fiber trunk cable into simplex- or duplex-style connection

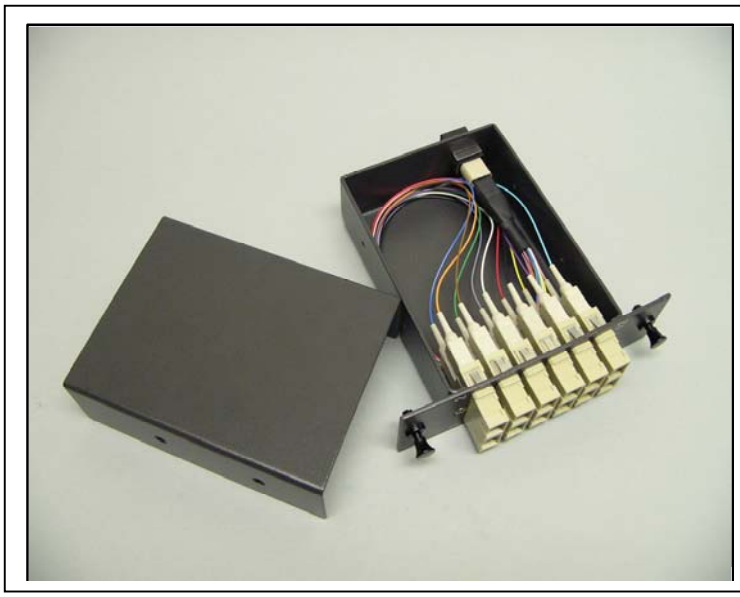

LightWave's Plug In Assembly is an effective solution that can flexibly accommodating for the changing data center environment. This innovative system is specially designed to reduce installation time and cost for an optical network infrastructure in the premises environment. The module is compact in size with simplex or duplex port adaptors at the front and MPO/MTP adaptor at the back. This system enables a multifiber trunk cable connection break-out into simplex- or duplex-style connectors.

✧ Fiber Cassettes

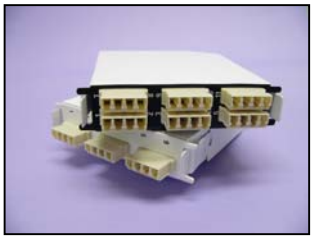

LC-MPO

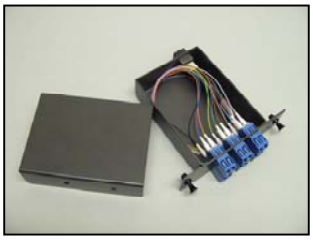

LC-MPO

LC-MPO

SC-MPO

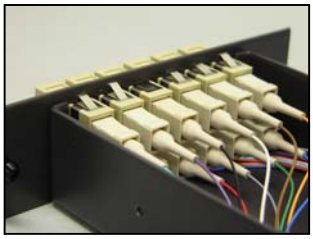

SC-MPO

Features/Benefits

- Space Saving Design
- Ideal for Data Center Applications
- Installer Friendly
- Factory preterminated module to substantially save installation time and labour
- Can be loaded with Rack Enclosures
- Cable terminated in high density MPO/MTP connectors
- Singlemode or Multimode components are available
- Available with 12 fiber and 24 fiber configurations for MTRJ (duplex); SC, LC and E2000 (simplex/duplex) connectors (other connector type available upon request)
- Tested for 100% guaranteed performance with MTRJ, SC, LC, and E2000 interfaces
- Two or more MPO/MTP assembled trunks can be easily linked together

∗1U Rack Mount Enclosures

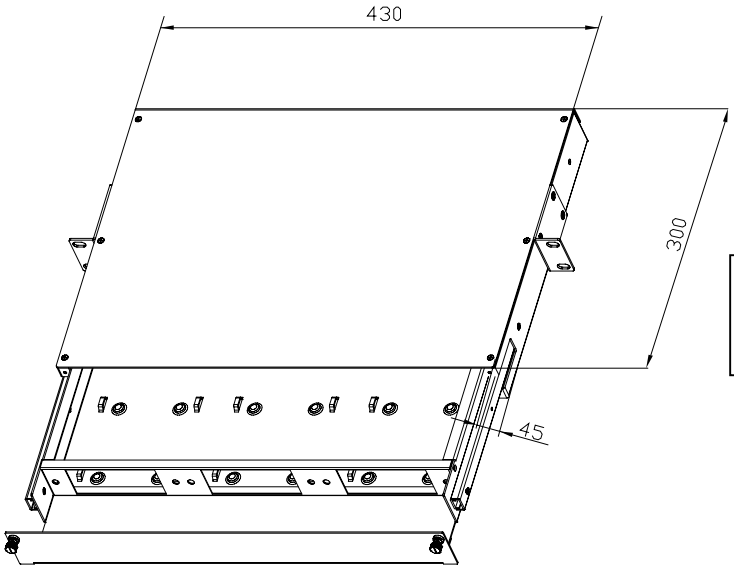

1U 3-port MM type rack mount enclosure

P/N: MM024LCDM00

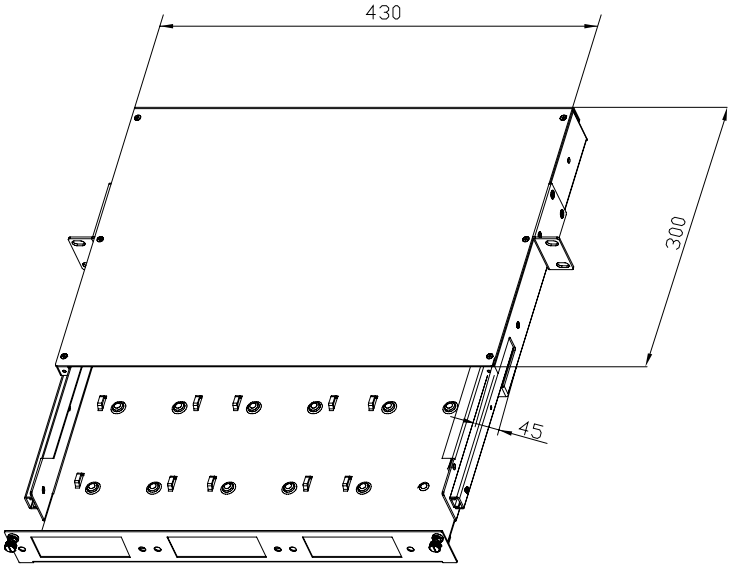

1U 3-port RM type rack mount enclosure

P/N: RM036LCDM00

∗1U Rack Mount Enclosures

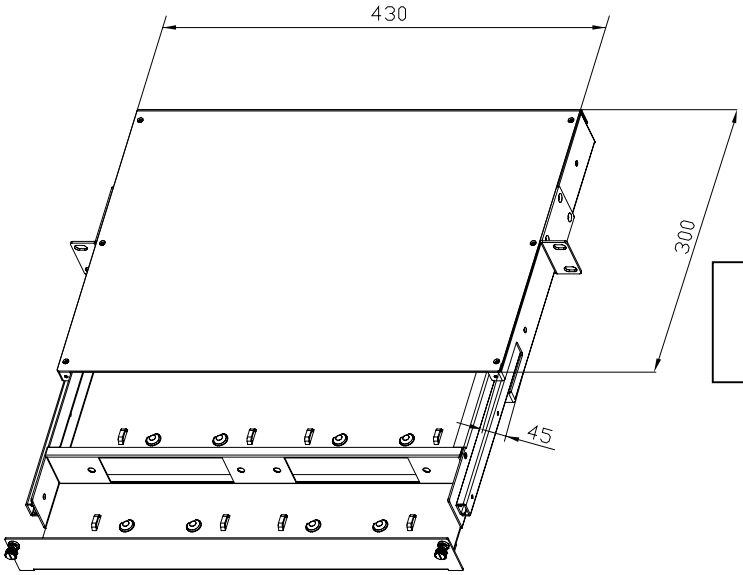

1U 2-port MM type rack mount enclosure

P/N: MM024LCDM00

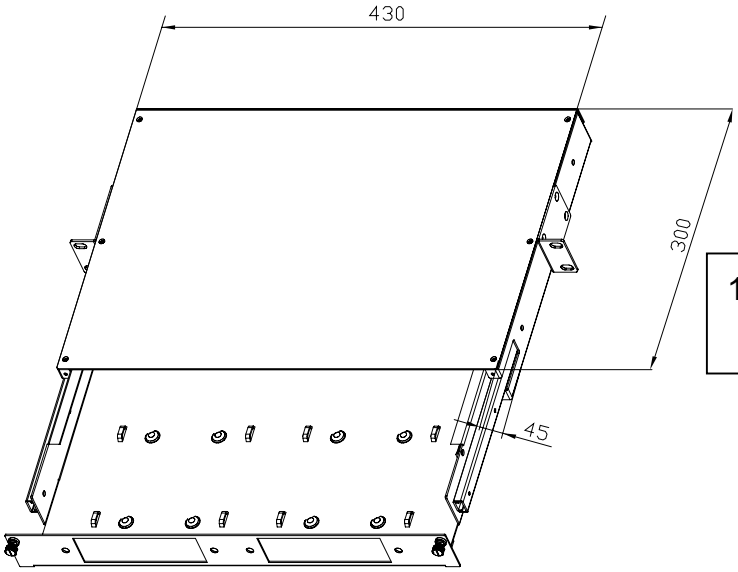

1U 2-port RM type rack mount enclosure

P/N: RM024LCDM00

∗Type L Cassette Dimension

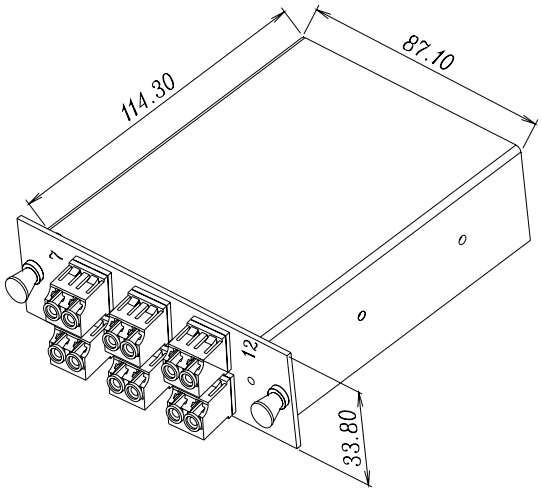

12 way LC to MPO

P/N :LA12LHD00SP

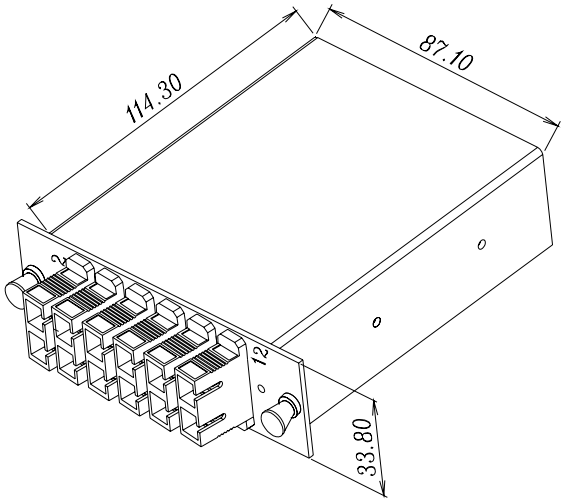

12 way SC to MPO

P/N:LA12SVD00SP

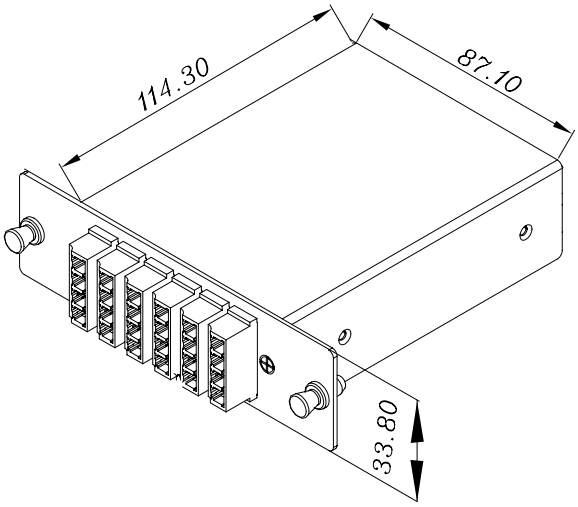

24 way LC to MPO

P/N:LA24LVQ00HP

∗Type W Cassette Dimension

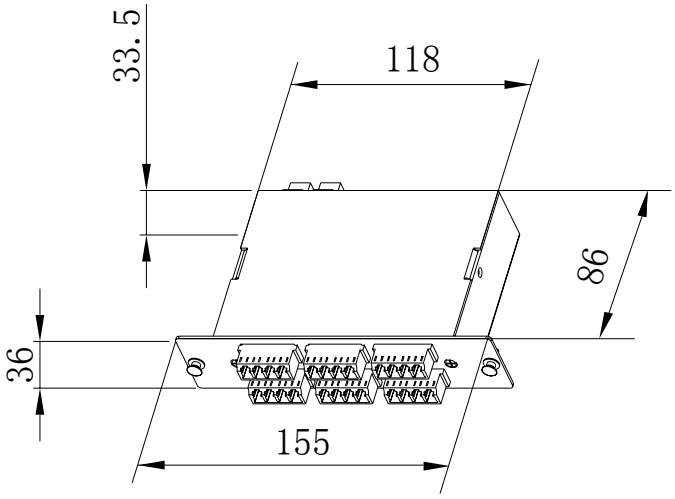

24 way LC to MPO

P/N:WA24LHQ00DP

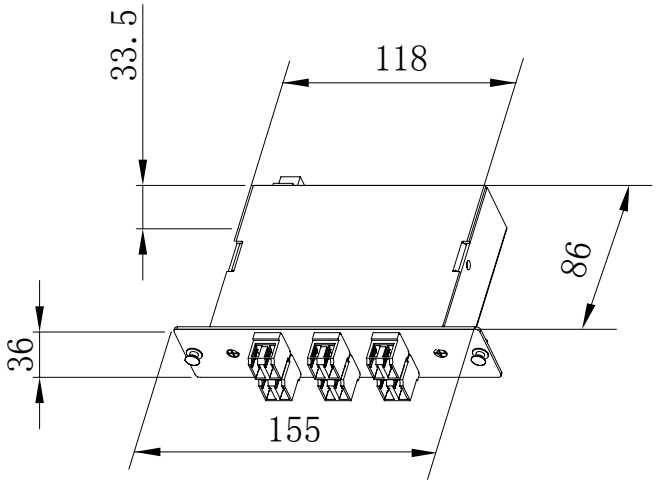

12 way LC to MPO

P/N:WA12LHD00SP

∗Type W Cassette Dimension

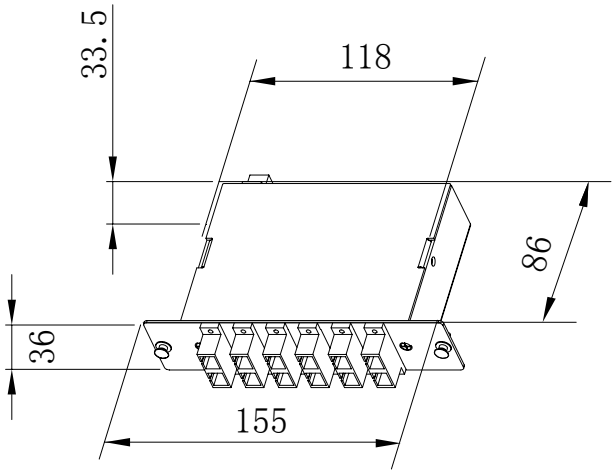

12 way SC to MPO

P/N:WA12SVD00SP

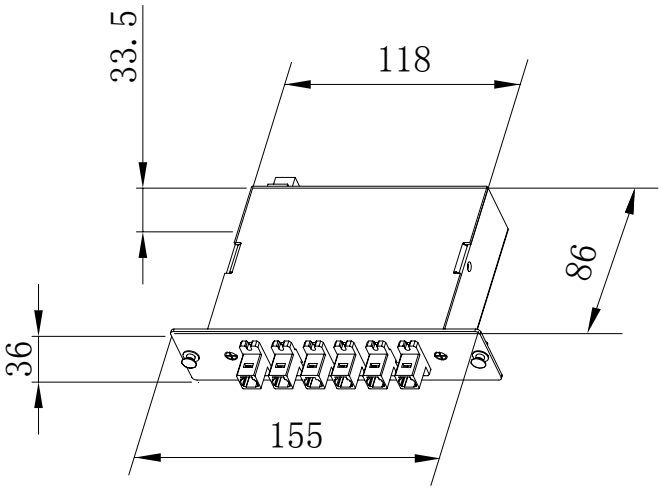

12 way MTRJ to MPO

P/N:WA12RSH00SP